MICRO g LACOSTE
A DIVISION OF LRS

TAGS-6

Turnkey Airborne Gravity System 6

User's Manual

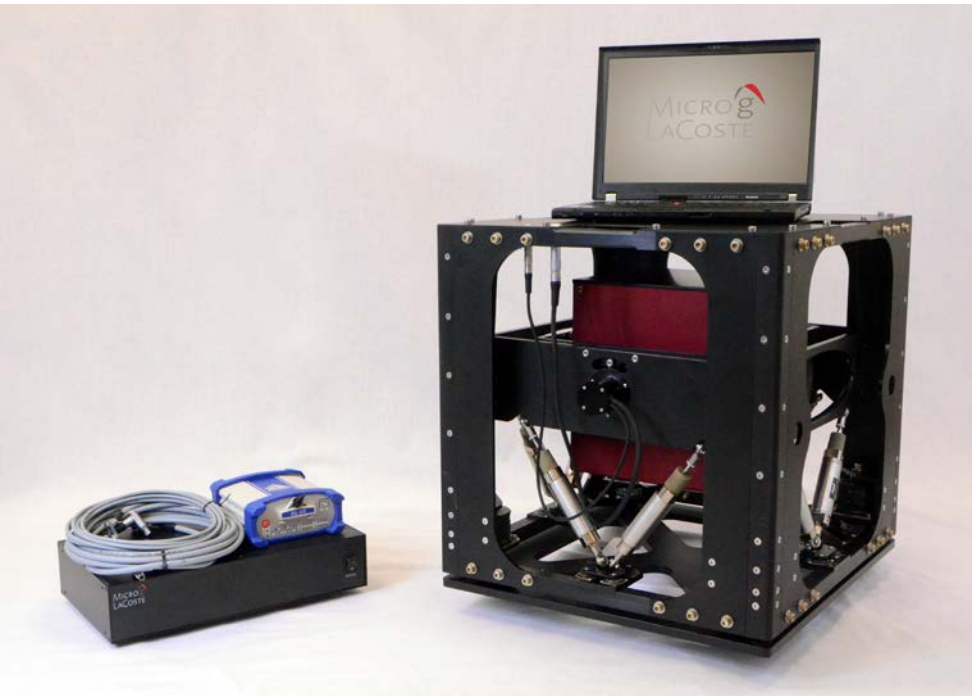

Release 115-780-001B, 23 December 2015

© Copyright 2012-2015 Micro-g LaCoste All Rights Reserved
Reproduction, adaptation, translation or storage in a retrieval system or transmission in any form or by any means without prior written permission is prohibited, except as allowed under the copyright laws.

Publication Number 115780001
Release 115-780-001B 23 December 2015

Applicable Products
Micro-g LaCoste: TAGS-6 Turnkey Airborne Gravity System 6

Disclaimer
The information contained in this document is subject to change without notice. Micro-g LaCoste makes no warranty of any kind. Micro-g LaCoste shall not be liable for errors contained herein or for incidental or consequential damages in connection with the furnishing, performance, or use of this material.

Contact
Micro-g LaCoste
1401 Horizon Avenue
Lafayette, Colorado 80026
USA

Tel: (303) 828-3499
Fax: (303) 828-3288
E-Mail: info@microglacoste.com
Website: www.microglacoste.com

Table of Contents

Section **Page**

1. Introduction 1-1

Overview 1-1

TAGS-6 Documentation 1-1

Conventions 1-1

2. Aircraft Prerequisites 2-1

Overview 2-1

Requirements 2-1

Considerations 2-1

Aircraft Components 2-2

Base Adapter Plate 2-2

Aircraft Antenna 2-2

Rack Mount Electronics 2-2

3. System Assembly 3-1

Initial Considerations 3-1

TAGS-6 Components 3-1

Frame 3-1

Gimbal 3-1

Sensor 3-2

Laptop 3-2

Electronic Assembly 3-2

UPS Assembly 3-3

Auxiliary Heater Box 3-3

Spare Parts 3-3

Assembly 3-3

Tools 3-3

Assembly Procedure 3-3

Cable Connections 3-7
Power Up The UPS And Heaters..... 3-8
Power On The System 3-8

4. Survey Operator Procedures 4-1

Survey Operation 4-1
Summary: Survey Preparation..... 4-1
Pre-Survey Check 4-1
Pre-Survey System Check..... 4-1
Daily Preflight System Check 4-1
Summary: Post Survey..... 4-2
Downloading Data..... 4-2
Still Reading (Calibration / Drift Check) 4-3

5. Survey Planning And Logistics 5-1

Considerations 5-1
Base Station Setup 5-2
Base Station Location: 5-2
Aircraft Base Location..... 5-2
Absolute Gravity Tie In 5-3

6. Operator Software Guide..... 6-1

PiperPro Software Program..... 6-1
Overview..... 6-1
Start-up Sequence 6-1

7. Standby Storage, Transportation And Shipping 7-1

Standby Storage 7-1
Next Survey Set Up..... 7-1
Transportation And Shipping 7-2
Disassembling Meter 7-2
Packing Instructions..... 7-3

8. Maintenance 8-1

Factory Service 8-1
Field Service 8-1
Field Troubleshooting 8-1

9. Support 9-1

Contact 9-1
Support Request 9-1
Service Request 9-1

Appendices

Appendix A Checklists A-1

Suggested Checklists A-1
Daily System Checklist A-1
Preflight Checklist A-1
Time Synchronization A-3
GPS Base Station Checklist A-3
In-flight Checklist A-4
Ferry To Survey Start Area A-4
Flight Lines A-4
Ferry Back To Base A-4
Post-flight Checklist A-5

Appendix B Spare Part Replacement B-1

Replacement Instructions B-1
Power Module (Electronic Box) B-1
GPS Receiver B-2
Laptop B-2
Air Damper B-3
Suspension Cord B-4

Air-Filled Vibration Mount B-5
Main Umbilical Cables B-5

Appendix C Northrup Grumman PowerGrid 800 UPS C-1

Front View C-3
Back View C-4

Appendix D ODU MINI-SNAP® Series B D-1

Appendix E Block Wiring Diagram E-1

Appendix F Troubleshooting F-1

Power Troubleshooting F-1
Sensor Troubleshooting F-2
Other Hardware Troubleshooting F-3

List of Figures

Figure 3-1 TAGS-6 Frame with Gimbal and Air Dampers 3-1
Figure 3-2 Gimbal With Suspension Cords 3-2
Figure 3-3 Sensor 3-2
Figure 3-4 Remove Top Plate 3-4
Figure 3-5 Inserting Suspension Cord through the Keyways 3-5
Figure 3-6 Insert Sensor Retaining Bolts-Into Sensor Handles 3-6
Figure 3-7 Jam Nut 3-7
Figure 3-8 Gimbal Long Lock 3-8
Figure 3-9 Gimbal Cross Lock 3-9
Figure 3-10 Gimbal Lock Pins 3-10
Figure 7-1 Frame/Gimbal and Rackmount Cases 7-4
Figure 7-2 Component Pelican Case, Sensor Transit Case And GPS Base Station Case 7-5
Figure 7-3 Tool Bag, Tripod Box, And Cable Bag 7-5

Figure 9-1 Example Service Request Form 9-2
Figure A-1 Example Failed Timestamp Field A-3
Figure B-1 Laptop Drawer B-3
Figure C-1 Northrup Grumman PG800-UPS Front View C-3
Figure C-2 Northrup Grumman PG800-UPS Back View C-4

List of Tables

Table 3-1 Serial Cable Connections 3-7
Table 7-1 TAGS-6 Transit Case And Foam List 7-3
Table A-1 Proper GPS Light Indicators A-2
Table C-1 AC Output Specifications C-1
Table C-2 AC Input Specifications C-1
Table C-3 DC Input Specifications C-2
Table C-4 Connectors Specifications C-2

1. INTRODUCTION

Overview 1-1
TAGS-6 Documentation 1-1
Conventions 1-1

Overview

The Turnkey Airborne Gravity System-6(TAGS-6) is the latest generation of dynamic gravity meters available from Micro-g LaCoste. The TAGS-6 User Manual provides succinct procedures for:

- Aircraft Prerequisites
- System Assembly
- Survey Operator Procedures
- Survey Planning And Logistics
- Operator Software Guide
- Transportation And Shipping

TAGS-6 Documentation

- TAGS-6 Turnkey Airborne Gravity System 6 User Manual
- Air / Sea Data Plotter
- TAGS-6 / MGS-6 PiperPro Processing Software Manual

Conventions

Dialog box menus, commands, dialog box titles, labels and options are bolded text in the user instructions. WARNING and IMPORTANT notes are highlighted in red.

2. AIRCRAFT PREREQUISITES

Overview 2-1
Requirements 2-1
Considerations 2-1
Aircraft Components 2-2
  Base Adapter Plate 2-2
  Aircraft Antenna 2-2
  Rack Mount Electronics 2-2

Overview

This section details the steps required for preparation and installation of the TAGS-6 system in the survey aircraft.

Requirements

- Survey Plan (See Section 5: Survey Planning and Logistics)
- Dedicated GPS Antenna
- Customized aircraft mounting plate
- 20-32 VDC or 100-264 VAC, 47-63 Hz Power Supply

Considerations

It is desirable to mount the system at the aircraft center of motion. This minimizes the magnitude of horizontal and vertical accelerations which can affect the system. This is not always possible owing to space constraints but the system should be mounted on the center line of the aircraft and as close to center of motion as possible.

The gravity sensor needs to be kept at a constant temperature to minimize drift during a survey. The sensor is thermally controlled to a specific temperature between 40 and 65 degrees centigrade. This thermostat temperature is different for each sensor and is determined during the sensor build process. The sensor needs to be on heater power whenever it is not being used during a survey. This can be done by supplying AC power to the electronics box with the electronics box plugged into the sensor. The aircraft needs a source of power while it is parked between flights.

To improve the accuracy of the onboard TAGS-6 GPS, a differential GPS system is used which requires a base station. The TAGS-6 GPS base station is identical to the system used on the aircraft except that a stationary tripod mounted antenna is required. The base station can be powered by the supplied 12 VDC batteries or 85-265 VAC input if available and requires a good horizon view away from sources of radio reflection. (For example: buildings, trees and especially power lines.)

A final consideration is referencing the survey to other surveys and gravity data. This is normally achieved by transferring an absolute gravity benchmark to a location at the airstrip which

the aircraft can park over. Normal survey operations require a pre and post flight calibration check over the benchmark to calculate any sensor drift. A portable land gravity meter such as the Scintrex CG-5 or a LaCoste and Romberg G-meter, is typically used to transfer the absolute gravity base station to the desired benchmark location.

Aircraft Components

Base Adapter Plate

The Base Adapter Plate is bolted to the aircraft seat rails and to the base of the TAGS-6 frame. Use only proper mounting hardware to attach the plate to the seat rails.

Aircraft Antenna

An aircraft mounted antenna designed specifically for differential GPS use is required. The antenna and TAGS-6 timing unit use a standard TNC type connector. The antenna should be mounted as closely as possible over the TAGS-6 sensor position and the aircraft center of motion.

Rack Mount Electronics

The system electronics are shipped in a portable rack mount unit. It is the end user's responsibility to securely mount the electronics in the aircraft.

Uninterruptible Power Supply and Inverter

The PG800 UPS/Inverter has a universal voltage input which can take an input voltage of between 100-264 VAC at 47-63Hz and 20-32 VDC.

Power Electronics Box

The Power Electrics Box provide communications and power to the system while on the ground and in the air.

Novatel GPS Receiver

The Novatel DL-V3 GPS Receiver is the heart of the timing on TAGS-6. In order to have good time synchronization the receiver must be powered on while acquiring data with the system.

3. SYSTEM ASSEMBLY

Initial Considerations 3-1
TAGS-6 Components 3-1
  Frame 3-1
  Gimbal 3-1
  Sensor 3-2
  Laptop 3-2
  Electronic Assembly 3-2
  UPS Assembly 3-3
  Auxiliary Heater Box 3-3
  Spare Parts 3-3
Assembly 3-3
  Tools 3-3
  Assembly Procedure 3-3
  Cable Connections 3-7
  Power Up The UPS And Heaters 3-8
  Power On The System 3-8

Initial Considerations

- It is important that the sensor remains on heat two weeks before a survey.
- The sensor must remain on heat during the survey.
- The sensor is on heat whenever it is plugged into the powered electronics box.

TAGS-6 Components

Frame

The TAGS-6 frame supports the gimbal and sensor and isolates them from vibration using suspension cords, air dampers and air filled vibration mounts. The TAGS-6 system, Figure 3-1, is shipped with the gimbal and air dampers installed in the frame.

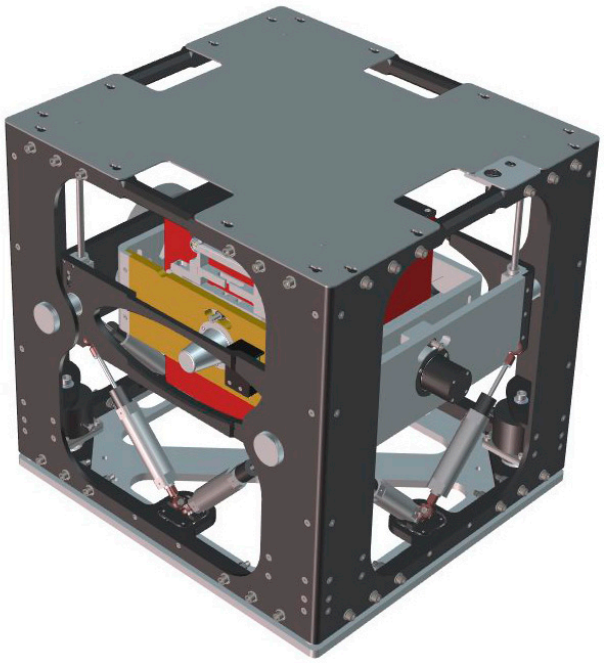

Figure 3-1 TAGS-6 Frame With Gimbal And Air Dampers

Gimbal

The gimbal, Figure 3-2, holds the gravity meter sensor and keeps it level when the system is moving.

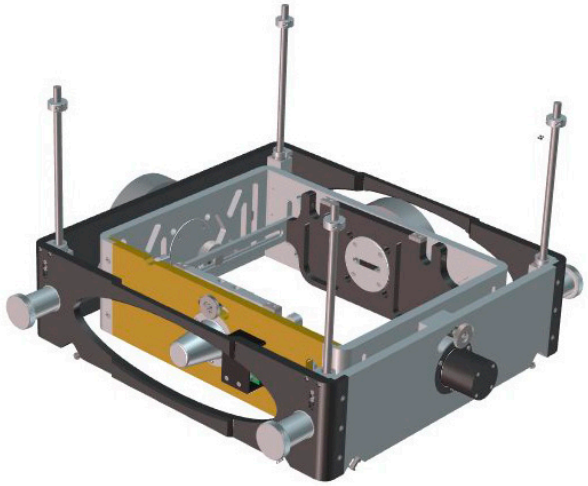

Figure 3-2 Gimbal With Suspension Cords.

Sensor

The gravity meter sensor, Figure 3-3, contains the gravity sensing element, heater, and electronics for the platform.

Figure 3-3 Sensor

Laptop

The system is provided with a laptop which is used to operate the sensor and to record the gravity data.

Electronic Assembly

The Electronic Assembly contains the Timing Module, the Power Module and the GPS receiver.

UPS Assembly

The UPS assembly houses the UPS and the base plate for ship mounting.

Auxiliary Heater Box

The Auxiliary Heater Box with long power cable is used to keep the sensor on heat while not connected to the main electronics.

Spare Parts

Spare parts are provided for the following components:

- Power Module
- Timing Module
- Air Dampers (8)
- Suspension cords (4)
- Air-Filled Vibration Mounts (4)

Assembly

Tools

- 1/4" hex wrench
- 3 mm hex wrench
- #2 Phillips screwdriver
- Tools for seat rail hardware

Assembly Procedure

1. Install the aircraft Base Adapter Plate.
   - Use seat rail mounts/bolts(user supplied) to secure the base plate to the aircraft floor.
2. Attach the Frame to the Base Adapter Plate with frame cable connecters oriented towards the front of the aircraft.
   - Attach the frame bolts (One in each corner).
3. Loosen the top plate screws (15 total) with a 3 mm hex wrench and remove the Top Plate. Refer to Figure 3-4.

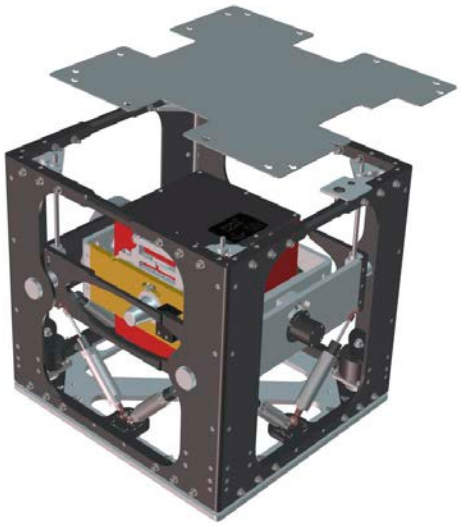

Figure 3-4 Remove Top Plate

4. Carefully suspend the gimbal by inserting the suspension cord clamps through the keyways (Refer to Figure 3-5) and resting them in the circular groove. Tuck the excess suspension cord back through the hole.

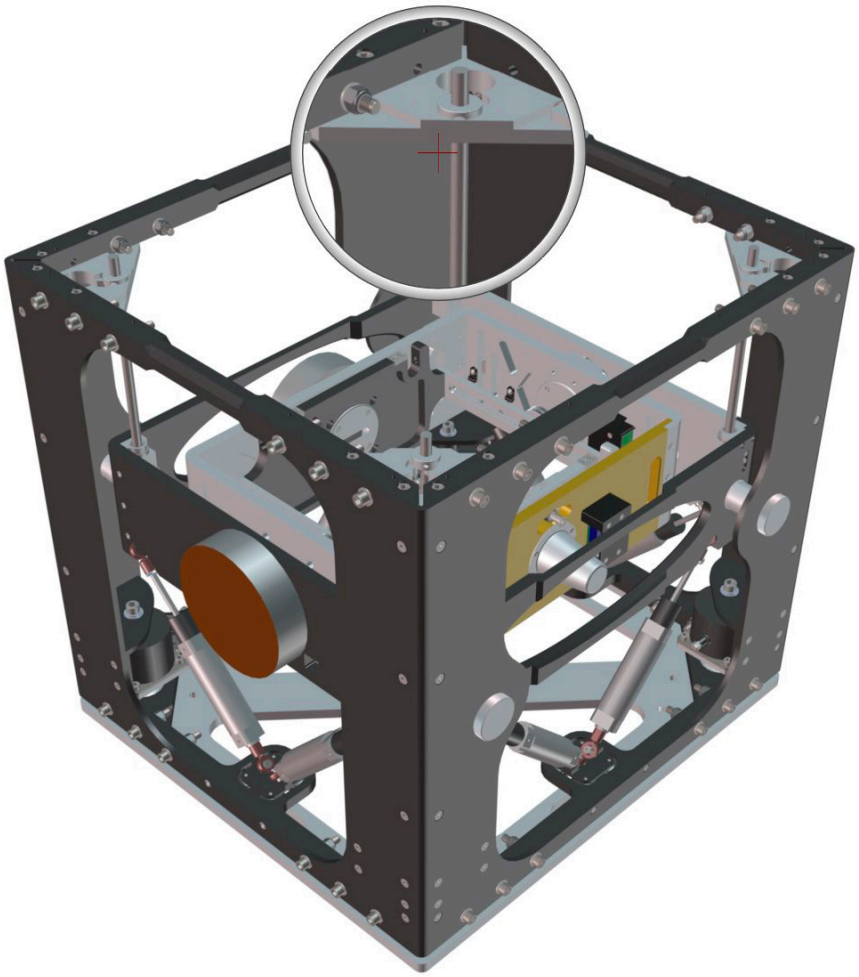

Figure 3-5 Inserting Suspension Cord Through The Keyways

5. Install Sensor into the Gimbal by:
   - Inserting the four retaining bolts into the sides of the handles on the sensor module to secure it into the gimbal. Refer to Figure 3-6.
   - Connect the plug from the inside gimbal slip ring to the socket on the side of the sensor.

WARNING	Lift the sensor by the two handles on the sensor. It is not easy to remove from the transit case because it is tightly packed.

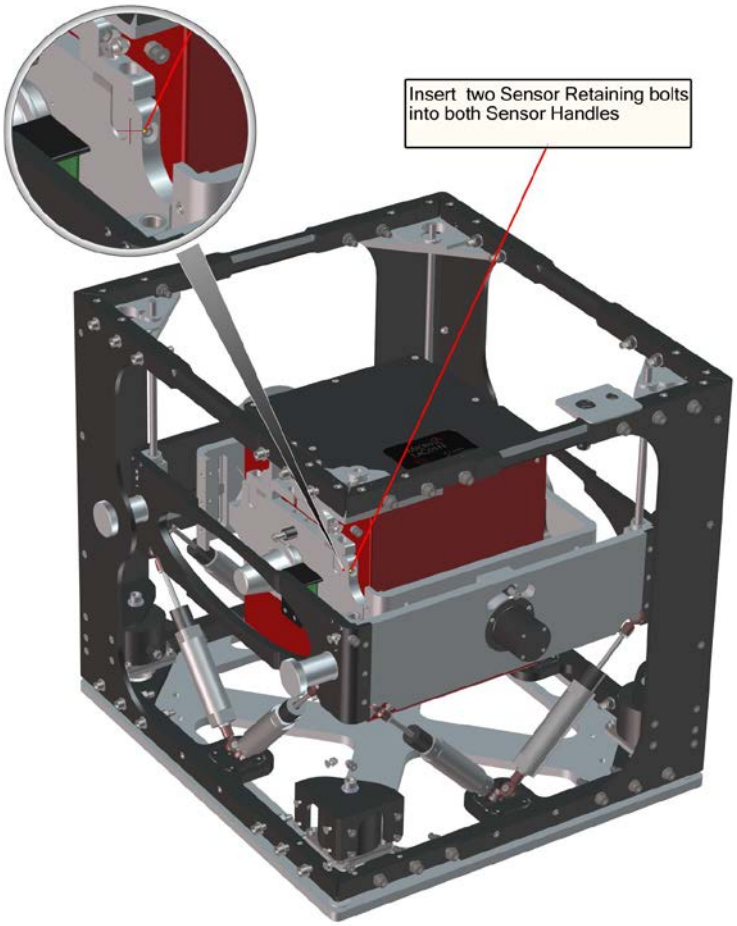

Figure 3-6 Insert Sensor Retaining Bolts-Into Sensor Handles

6. Reinstall the top panel.
7. Screw the Jam Nuts under all four of the Air-Filled Vibration Mounts to the top position. They should click into place. Refer to Figure 3-7.
8. Inflate the Air-Filled Vibration Mounts to 25 psi.

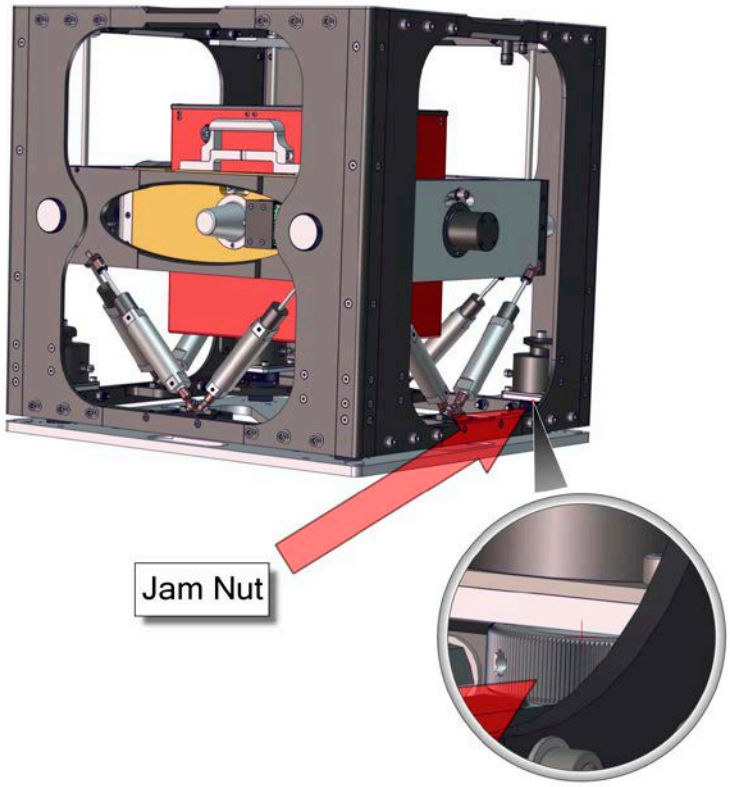

Figure 3-7 Jam Nut

Cable Connections

- Connect the sensor umbilical cable between the Power Electronics Box and the sensor frame.
- Install the three serial cables between the laptop, Power Electronics Box, and Novatel GPS Receiver. Refer to Table 3-1.

Table 3-1 Serial Cable Connections

GPS COM1	Power Electronics Box “GPS COM 1”
GPS I/O	Power Electronics Box “GPS I/O”
Laptop USB Port (USB to Serial Adaptor)	Power Electronics Box “COMP COM”

- Connect the GPS antenna to the Novatel.
- Connect the power cord for the Power Electronics Box to the UPS/Inverter power strip.
- Connect the input power cord to the UPS/Inverter.

Power Up The UPS And Heaters

- Turn system on using the power switch on the front of the UPS.
  - Inner and outer heater LEDs on top of the Sensor should be lit or flashing to indicate that the sensor heaters are powered.

Power On The System

- Power on the laptop.
- Double click the **TAGS-6** icon on the desktop.
- Set up the GPS antenna.
- Unlock the Gimbal by disengaging the long and cross gimbal locks. Refer to Figure 3-8 and Figure 3-9.

WARNING	Do not turn on the TAGS-6 Power Electronics Box until the long and cross gimbal locks are disengaged. The platform stabilization motors can be damaged if the long and cross gimbal locks are engaged.

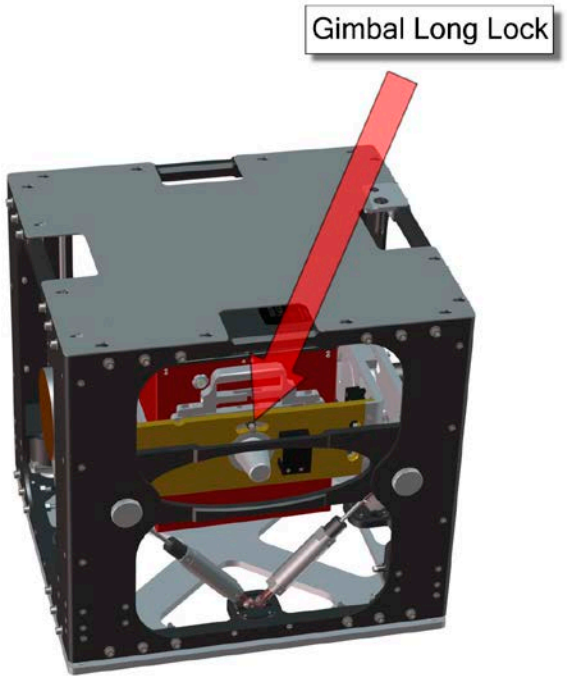

Figure 3-8 Gimbal Long Lock

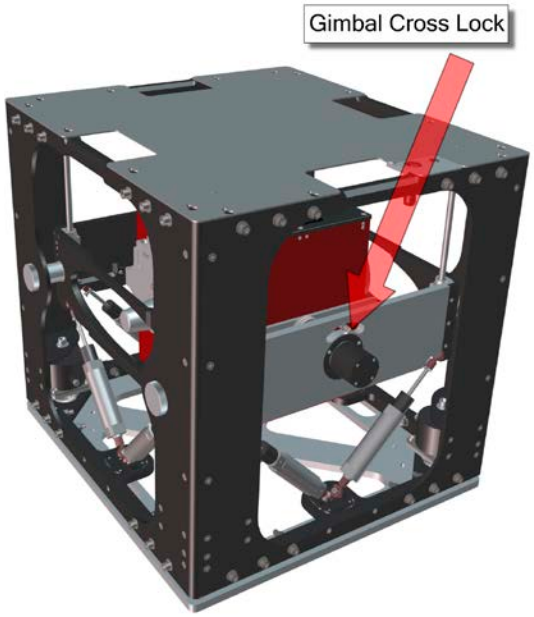

Figure 3-9 Gimbal Cross Lock

- Turn the main power switch (located on the Power Electronics Box) **ON**.
  - The Gimbal should start working and begin to balance.
  - It is important that the Gimbal Lock Pins be removed when acquiring data. Refer to Figure 3-10.

IMPORTANT	The TAGS-6 has been designed to pass FAA 20g certification. For take-off and landing, the Gimbal Lock Pins should be in place.

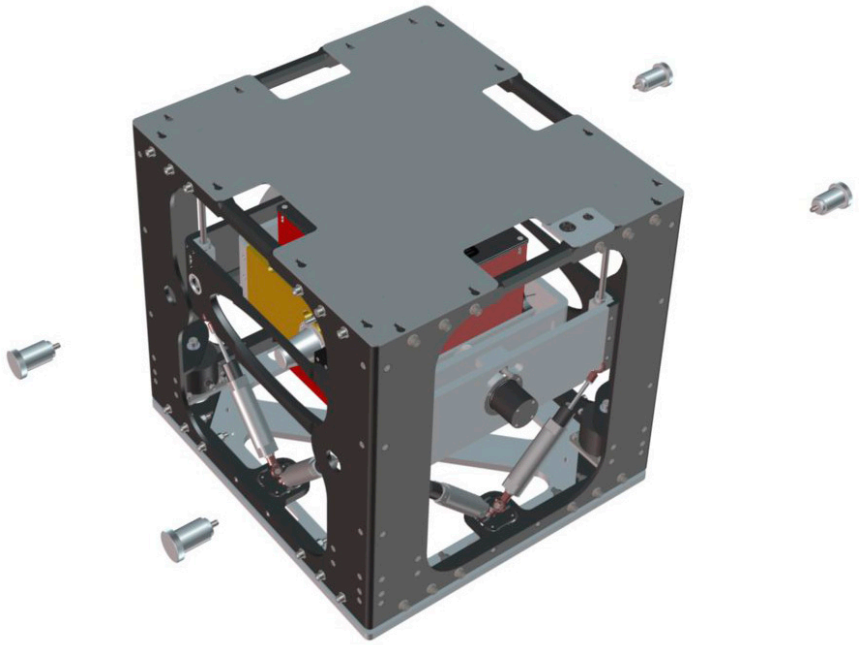

Figure 3-10 Gimbal Lock Pins

- Power on the Novatel.
  - The laptop should begin to receive data from the meter.

4. SURVEY OPERATOR PROCEDURES

Survey Operation 4-1
Summary: Survey Preparation 4-1
  Pre-Survey Check 4-1
Pre-Survey System Check 4-1
Daily Preflight System Check 4-1
Summary: Post Survey 4-2
  Downloading Data 4-2
Still Reading (Calibration / Drift Check) 4-3

Survey Operation

- Survey planning and logistics
- GPS Base Station Setup
- Aircraft Base location
- Absolute gravity tie in
- Aircraft layout and other survey hardware

Summary: Survey Preparation

Pre-Survey Check

- Survey flight plan
- Calculate the regional and local terrain corrections
  - Refer to the TAGS-6 / MGS-6 PiperPro Processing Software Manual for more information.
- Absolute Gravity tie in for survey reference
- Base station GPS setup
- Aircraft Base location
- Survey Check List Form
- Pre-Survey Still Reading
  - Field Calibrations
- Level Check

Pre-Survey System Check

The pre-survey system check should ensure that all systems components, including spares, are functioning correctly.

- PG800 UPS/Inverter batteries are charged
- Primary and Spare Power Electronics Box are operational
- Cables and connectors
- Air-filled Vibration Mounts
- Suspension cords
- Air Dampers
- Timing Units and GPS Antennas

Daily Preflight System Check

The following are included in the daily preflight system check.

- Air-filled Vibration Mounts

- Cables and connectors
- Air Dampers
- Aircraft Mounting Plate
- Base Plate
- GPS Data Card (Clear off old data)

Summary: Post Survey

Downloading Data

Refer to Section 6 in the TAGS-6 / MGS-6 PiperPro Processing Software Manual for detailed information on the data file formats.

- Raw gravity data (.dat and .env data files)
- Screen shots of still readings
  - Pre-survey
  - Post-survey
- GPS data (.PDC data files)
  - Field GPS Base Station (Master)
  - Aircraft GPS (Remote)
  - Flight operator log

WARNING TAGS-6 sensors are leak-tested at the factory. It is important to note that all meters do leak at a very slow rate even when properly sealed. The leakage would appear as meter drift of a maximum of about one mGal/month, in addition to the drift due to spring aging (Less than three mGals/month).

WARNING Internal pressure increases approximately 100-170 mbars as the meter heats up from ambient to an operating temperature between 45 - 65° C depending on the temperature set point of your sensor. When heater power is turned off and the meter cools, a negative pressure differential is created which will similarly increase the drift rate.

Still Reading (Calibration / Drift Check)

A stationary reading known as a Still Reading is made pre and post flight.

- It takes the system 15 - 20 minutes to settle to a gravity reading of better than 0.5 mGal.

NOTE The still reading can be made a lot faster in a quiet noise environment. e.g. minimize personnel getting on and off the aircraft during the still reading.

- Fill out the Check Sheet Form.
- Note the following values from the TAGS-6 main screen
  - **GMT** date and time
  - **GRAVITY** value in mGals
  - **BEAM** position in volts
  - **METER TEMP °C** temperature information
- Take a screen shot of the still reading screen.
- At the end of the still reading, click the **CLAMP** button. **METER STATUS** box reads Online and Clamped.

5. SURVEY PLANNING AND LOGISTICS

Considerations 5-1
Base Station Setup 5-2
Base Station Location: 5-2
Aircraft Base Location 5-2
Absolute Gravity Tie In 5-3

Considerations

- Permission to fly in the survey area.
- The real extent and elevations of highest terrain in the survey area.
- Restricted airspace near the survey area.
- Communications between base, aircraft and any ground crews for operation and safety.
- Airport location, supply and service capability for flight operations.
- Crew accommodations and work office for field planning and operations.
- Onsite quality control data processing capability.
- Operational structure for personnel reporting and safety plan.

To improve the accuracy of the onboard TAGS-6 GPS, a differential GPS system is used which requires a base station. The TAGS-6 GPS base station is identical to the system used on the aircraft except that a high performance, tripod mounted antenna is required. The base station can be powered by 12V battery and requires a good horizon view away from sources of radio reflection. (For example: buildings, trees and especially power lines.)

A final consideration is referencing the survey to other surveys and gravity data. This is normally achieved by transferring an absolute gravity benchmark to a location at the airstrip which the aircraft can park over. Normal survey operations require a pre and post flight calibration check over the benchmark to calculate any sensor drift. A portable land gravity meter, such as the Scintrex CG5 or LaCoste and Romberg G meter, is typically used to transfer the absolute gravity base station to the desired location.

Base Station Setup

- The TAGS-6 hardware includes a base station GPS and timing unit to enable precision timing and location of the TAGS-6 sensor while it is in flight survey mode.

IMPORTANT The Base Station is a required part of the data collection hardware and must be setup before flight.

- The Base Station timing unit is identical to the unit which is integrated with the sensor.
  - There is also a spare unit which serves as a backup to either the flight unit or the base unit.
  - Note that two Base Stations or two Flight Units could be run if desired but this is not typical of normal survey operations.

Base Station Location:

- Needs to be setup according to normal GPS rules.
- As much as possible, it must be in a clear signal area.
- The best location is away from buildings, vehicles and power lines.
- It needs a good horizon view for maximum satellites. The roof of a building is often good if it can be accessed.
- The base station antenna needs to be solidly mounted either on the tripod or a fixed mast so that the base position remains the same throughout the survey operation from that location.
- The timing unit/GPS can be powered either from a 12 volt DC source or 120 - 240 volt AC. It is recommended that a UPS is used with AC power to eliminate the possibility of a reset due to power fluctuations.
- Heat and cold can also affect the operation of the timing unit so it is recommended to keep the unit sheltered from the sun and freezing temperatures.

NOTE Without the GPS base reference data the flight data may be useless.

Aircraft Base Location

The ideal base location is close to the survey area with power and a hangar available for the aircraft along with a good place to set up the base station.

- The choice of an operating base for the aircraft is important to minimize operational delays.
- Survey operations require that the aircraft be parked over the same spot before and after each flight to perform the still reading calibration check of the meter.
  - The best method for doing this typically involved marking a location on the hangar apron or a place where the aircraft will not impede other traffic.
- The aircraft must have access to ground power wherever it is parked so the sensor can be kept ON power continuously during the survey.

Absolute Gravity Tie In

- Each survey is typically tied in to the local absolute gravity reference station so that the relative gravity values calculated during the survey can be correlated with other gravity values
- The absolute gravity tie is made using a relative gravity meter such as the LaCoste and Romberg G meter or the Scintrex CG5.
  - The closest usable absolute gravity station is measured using the relative meter.
  - The relative meter is then taken to the spot which is marked as the location for the pre and post flight still readings where another measurement is taken.
  - The difference between the two measurements is added to the absolute station value to give the absolute value at the still reading location.
  - To ensure a reliable value the measurement loop between absolute station and still reading location should be repeated three to five times.
- It is also important to know the height of the TAGS-6 sensor, to within 10 cm, above the still reading mark.

6. OPERATOR SOFTWARE GUIDE

PiperPro Software Program 6-1
Overview 6-1
Start-up Sequence 6-1

PiperPro Software Program

Overview

The PiperPro software program is the data acquisition and quality control software system for the Micro-g LaCoste Turnkey Airborne Gravity System 6 (TAGS-6) gravity meter. The software is integrated with the Novatel to provide system timing and positioning.

Refer to the TAGS-6 / MGS-6 PiperPro Processing Software Manual for complete description of the main screen controls and menu options.

Start-up Sequence

- Double click on the PiperPro icon (or the TAGS-6 executable file) to open the main TAGS-6 screen.
- Verify that all settings are correct before starting data acquisition.
- Start acquisitions by selecting **New** from the **File** menu.
  - In the **Select Output Directory** browser select a path and filename for the data.
- Check that the status bar at the bottom of the screen shows **GPS OK**.

NOTE If the status bar reads **NO GPS** then a manual GPS synchronization may be required. Select **Synchronize Clock** from the **System** menu. The status bar changes and displays **GPS OK**.

- Check that the status bar displays **CLAMPED**.
- Check that accelerometers are stable at around 0 ± 0.3.
- Click **UNCLAMP** button to unclamp the BEAM (Indicator light turns GREEN).
- If **TURNING** mode is flashing, click **ONLINE** button.
- After survey line is complete, select **TURNING** button.
- Repeat last two steps for duration of survey (switching between **ONLINE** and **TURNING** mode).
- After survey is completed, select **CLAMP** button (Before landing).
- Close PiperPro and backup survey data to external media.

NOTE There are physical limits on the Clamp.

If the motor does not turn off after the status bar indicator changes to **CLAMPED** or **UNCLAMPED** then select **Stop Clamping/Unclamping** from the **System** menu to turn off the motor.

If this is a regular occurrence then a recalibration of the clamp/unclamp positions may be required. From the System menu, select **Set Limits**. If the problem persists, contact Micro-g LaCoste. Refer to Section 09 for support contact instructions.

TAXI AND TAKE-OFF

When transiting to the survey area and for take-off, ensure that the meter is **CLAMPED**.

ONLINE

On line is the normal data collection mode. The status bar reads **ONLINE**. The selectable plot width is typically set to 0.2 Hrs. Use this mode for still readings and while you are surveying.

TURNING

Click the **TURNING** button at the end of the line. Normally two to three minutes past the end of data. The status bar will indicate that the system is **TURNING** and the **ON TRACK** flag will automatically be cleared.

LANDING

Click the **CLAMP** button at the end of the last flight line to make sure the system is secure for landing.

After landing, do the post flight still reading at the initial still reading location.

7. STANDBY STORAGE, TRANSPORTATION AND SHIPPING

Standby Storage 7-1
Next Survey Set Up 7-1
Transportation And Shipping 7-2
Disassembling Meter 7-2
Packing Instructions 7-3

Standby Storage

Between airborne surveys or when using the TAGS-6 for marine application and the ship is in port or docked for a long period of time (one or more months) the TAGS-6 meter should be configured into the Standby Storage state.

1. Shutdown the system and power OFF the Power Electronics Box and GPS Receiver.
2. Power OFF the Laptop.
3. Use the Gimbal Lock Pins to secure the Gimbal to the Frame.
4. Use the Gimbal Locks to secure the Gimbal Rings.
5. Disconnect the Sensor from the inner gimbal ring cable.
6. Disconnect the umbilical cable from the frame and the Power Electronics Box.
7. Use AUX heater and umbilical cable to keep the Sensor on heat.
8. Shut down the UPS and disconnect from ship power.
9. Deflate the Air-filled Vibration mounts and lock the Frame Jam Nuts.
10. Disconnect the cables from the ship to the system and Laptop.
11. Remove the Frame Lid..
12. Disconnect the Suspension cords.
13. Replace and secure the Frame Lid.

Next Survey Set Up

1. Plug in and then turn on the UPS.
   - The Heater light should turn ON (located on the front of the Power Module).
2. Remove the Frame Lid.
3. Reconnect the Suspension Cords.
4. Replace and secure the Frame Lid.
5. Unplug the umbilical cable from the sensor and plug the gimbal ring cable into the sensor.
6. Plug the umbilical cable into the frame.
7. Plug the other end of the umbilical cable from AUX Heater into the Power Electronics Box.
   - The Inner and Outer Oven LEDs should be lit or flashing on the lid of the sensor.
8. Unlock the Gimbal Rings.
9. Remove the Gimbal Lock Pins.

10. Unlock the Frame Jam Nuts.
11. Inflate Air-filled Vibration mounts to 25 PSI.
12. Disconnect AUX heater and remove long umbilical cable.
13. Power ON the Power Electronics Box and the GPS Receiver.
14. Power ON the Laptop.
15. Start the PiperPro software.

Transportation And Shipping

Disassembling Meter

- Check that the TAGS-6 software indicates that the meter is clamped.
  - The clamped light on the sensor is ON.
- Shut down the Data Logger laptop.
- Turn OFF the main power switch on the Power Electronics Box.
- Engage both long and cross gimbal locks
- Turn OFF the UPS. Remove frame top plate.
- Install the four Gimbal Lock Pins into the Gimbal through the frame uprights.
- Release the four suspension cords from the upper gussets.

WARNING	The Gimbal Lock Pins must be installed and the suspension cords released prior to shipping to prevent potential damage to the frame, Gimbal and Air Dampers.

- Disconnect all AC Power at BOTH the Power Electronics Box and UPS.
- Disconnect the connector from the side of the sensor.
- Remove the four screws on the sides of the handles that hold the sensor in place.
- Remove the Sensor from the Gimbal and put it into the Sensor Transit Case.
- Disconnect the umbilical cable from the back of the Power Electronics Box and from the Frame.
- Reinstall Frame Lid.
- Release pressure from the air-filled vibration mounts.
- Screw the Jam Nuts down to base of Frame.

WARNING	Do not lift the Frame until Jam Nuts are in the down position, the air filled vibration mounts will be damaged.

- Place the Frame in the Frame Case.

- Pack the accessories inside the shipping crate on top of the transit cases.

Packing Instructions

Transit cases must be shipped inside of a shipping crate. Pack the TAGS-6 system transit cases into the shipping crate as shown in Figure 7-1 through Figure 7-3, using foam as indicated in Table 7-1. It is highly recommended to use the transit cases, crate and foam provided by Micro-g LaCoste.

The standing shipping crates are made of molded Polyethylene Resin. Check the packing list sent with your equipment for typical content.

Table 7-1 TAGS-6 Transit Case And Foam List

TAGS-6 Crate and Foam		
Dimension	Qty Ea	Description
2x18x20	1	Sensor inner handle side
2x21x36	1	Top 7U case
2x28x36	1	Right crate end
2x19x20	1	Sensor front
2x30x32	1	Top of frame
1x30x47	2	Adapter Plate
2x47x55	2	Crate long sides
2x40x55	1	Crate bottom
9x12x25	1	Right of Pelican
12x17x21	1	Front sensor/under tripod
2x36x47	1	Left crate end
40x55x49H	1	Crate - Internal Dims

Figure 7-1 Frame/Gimbal And Rackmount Cases

Figure 7-2 Component Pelican Case, Sensor Transit Case And GPS Base Station Case

Figure 7-3 Tool Bag, Tripod Box, And Cable Bag

8. MAINTENANCE

Factory Service 8-1
Field Service 8-1
Field Troubleshooting 8-1

Factory Service

Micro-g LaCoste recommends that the TAGS Gravity System 6 be returned to our factory for periodic testing and servicing.

The system should be serviced every five to eight years depending upon use. Refer to Section 09 for service request instructions.

General Servicing includes the following procedures:

- Sensor:
  - Clean and adjust Measuring Screw
  - Replace Seals
  - Adjust Sensor if necessary
  - Leak Test
- Platform:
  - Service Air Dampers
  - Replace Air-Filled Vibration Mounts
  - Replace Suspension Bungees
- System:
  - Software and firmware update
  - Factory Tests and Calibration

Field Service

Service is primarily complete at the factory. Contact Customer Service for any field services.

Field Troubleshooting

Troubleshooting requires careful observation of the symptoms, and an understanding of the system functions to determine which part has failed, or which device is out of adjustment. Swapping parts is the most obvious technique, but sometimes the process of changing components can cause additional problems.

The most common problems are often caused by connectors. Check that every connector is screwed or locked into place, and no cables are cut or pinched.

If you are not confident about diagnosing the problem, contact customer service for advice. Be prepared to provide clear detailed documentation of the symptoms. Refer to Section 09 for support request instructions.

9. SUPPORT

Contact 9-1
Support Request 9-1
Service Request 9-1

Contact

For questions, service request or support request please contact Micro-g LaCoste Customer Service at Info@microglacoste.com.

Support Request

Providing complete detailed information helps us diagnose and respond with a more accurate and timely response. For large file uploads, contact Customer Service for ftp site instructions.

- Instrument model and serial number
- Scenario description
  - Setup
  - Environment
- Complete Detailed Problem Description
  - Include step-by step instructions for reproducing the problem.
- Screen Shots and/or Video as appropriate
- Applicable Files:
  - Still reading Pre/Post screen shots
  - Data Files
  - Flight Logs
  - Error Logs
- Text of any error message if applicable.
- PiperPro software version (Found in the PiperPro **Help** menu).

Service Request

A Service Request Form (Figure 9-1) must be faxed to Micro-g LaCoste for hardware service requests. After receipt of this form a return authorization number is sent along with a purchase order.

Contact Customer Support for a copy of this form and any additional instructions.

MICRO g LACOSTE
A DIVISION OF LRS

T: 303.828.3499
F: 303.828.3288
1401 Horizon Avenue
Lafayette, CO 80026
WWW.MICROGLACOSTE.COM

SERVICE REQUEST FORM

Due to multiple points of contact for customer service requests, email messages will no longer be considered as formal requests for service. Please complete the following form and then fax it to (303) 828-962-7983 or email to info@microglacoste.com. After receipt and review of this form, a return authorization number will be issued and a purchase order requested from the customer

Estimated Ship Date for Service:	**Return Authorization No**
Customer Information: **Name:** **Address:** **Contact Person:**	
Products to Return:	
Reason for Return:	
Specific Problems:	
Specific Requests:	
Additional Comments:	
By:	**Date:**

Figure 9-1 Example Service Request Form

APPENDIX A CHECKLISTS

Suggested Checklists

- Daily system checklist
- Preflight checklist
- Setting up the GPS Base Station
- In-flight checklist
- Postflight checklist

Daily System Checklist

Verify

- Jam Nuts under the mounts have not moved to the bottom.
- Air-Filled Shock Mounts are holding air.
- Frame free to wobble in all directions.
- Remove Gimbal Lock Pins if installed and verify that the gimbal Air-Dampers moves equally well in all directions.
- Power cables are securely plugged in.

Check for loose bolts

- Where the Base Adapter Plate is attached to the plane.
- Where the TAGS-6 frame attaches to the Base Adapter Plate.

Clean cards

- Clean off old data from Compact Flashcard (CF) cards.

Preflight Checklist

- Remove all four Gimbal Lock Pin and store on the Base Plate.
- Unlock Gimbal.
- GPS receiver is OFF.
- Insert formatted 2GB card into the GPS receiver.
- Turn ON GPS receiver and check for proper lights. Refer to Table A-1.
- Power Electronics Box power switch is ON.
- Start up laptop.
- Start TAGS-6 software
- Create new data file
- Click **UNCLAMP**
- Wait for Transient to pass (Could take up to 45 minutes after unclamping due to heating of electronics).

NOTE Reduce the time of this transient by leaving the system unclamped overnight or by unclamping the system well prior to taxi and take-off.

- While waiting for Transient, set up the GPS Base station.
- After transient has passed, take and save screenshot
- Insert Gimbal Lock Pins for taxi and take-off
- Synchronize the system to the GPS by clicking on **Synchronize Clock** under the **System** menu. Note rare "Time Synchronization failure" resolution steps below.
- Wait until just before take-off, and then **CLAMP** the system. This keeps in flight transients to a minimum.

Table A-1 Proper GPS Light Indicators

Light Color	Indications
Green	COM1 light flashing rapidly
Blue	Blue light under the COM1 Light flashes once per second
Green	Satellite indicator ON
Yellow	Target or Precision indicator ON
Green	Disk indicator is green and flashes once per second
Green	Hourglass or time indicator ON

Time Synchronization

On rare occasions the time synchronization failure may delay getting good data. It can be identified as follows:

- If synchronization succeeds, the timestamp field in the incoming meter data shows a valid date. YearMonthDayHoursMinutesSeconds.
- If the synchronization fails the timestamp field still shows the year as “00”.

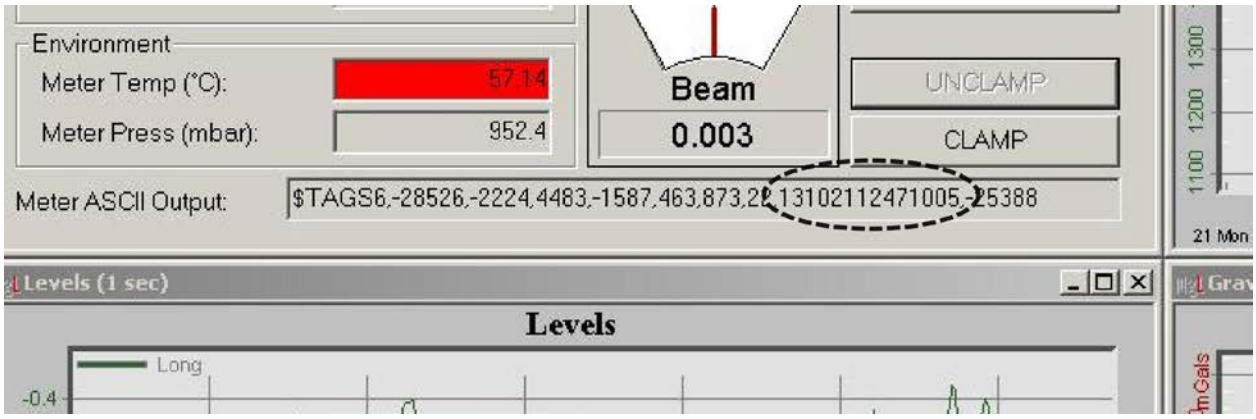

Figure A-1 Example Failed Timestamp Field

If a failure is seen, periodically resynchronize until a successful synchronization has occurred.

To resynchronize:

- Close the current file.
- Create a new file.
- Click **Synchronize Clock** under the **System** menu, and, again.
- Check the Meter ASCII Output box for a correct date/time stamp.

GPS Base Station Checklist

- Set up tripod
  - ~100m away from structures and other potential GPS interference.
  - A rooftop can often be a good place if access is available.
- Attach antenna to tripod.
- Attach cable between antenna and GPS base station receiver.

- Verify that the GPS receiver power is OFF (only one yellow light if the system has power).

IMPORTANT	The GPS receiver power must be OFF before inserting the CF card, otherwise data may not be recorded to the card during flight.

- Insert a formatted 2 GB Compact Flashcard (CF).

NOTE	GPS data is recorded at 20 Hz 600 MB of data is recorded per hour. Make sure there is enough space on the card for the expected time in the air. A 2 GB card yields about 33 hours of data recording.

- Connect power to receiver if is not powered already.
- Turn receiver ON.
- Wait for satellite connection.
- Verify that the proper lights are ON. Refer to Table A-1.

In-flight Checklist

Ferry To Survey Start Area

- Shortly after take-off click **UNCLAMP**.
- While ferrying to the start of the line, remove the Gimbal Lock Pins.

Flight Lines

Repeat the following steps until all lines for a single flight have been completed

- Wait for pilot to indicate end of line, then click **TURNING**.
- After the pilot has finished the turn and has started the lead-in, click **ONLINE**.

Ferry Back To Base

The following steps are for ferrying back to the base, approach and landing.

- Insert Gimbal Lock Pins while ferrying back to the landing area.
- On landing approach, click **CLAMP**.
- After the plane is on the ground and taxiing click **UNCLAMP**.

Post-flight Checklist

- Remove Gimbal Locking Pins.
- Wait for all aircraft activity (parking, unloading, etc) to be completed.
- Reset plots by clicking on **Reset All Graphs** under the **View** menu.
- Wait about 20 minutes.
- Take a screenshot.
- **Clamp** the sensor.
- Stop and close the TAGS-6 software.
- Turn off the meter's GPS receiver and remove the card.
- Copy the Gravity file from the laptop to a USB drive.
- Turn off the GPS Base receiver and remove the card.
- Send or give data to the data processor.

APPENDIX B SPARE PART REPLACEMENT

Replacement Instructions

Before replacing any spare parts:

- Clamp the Sensor
- Shutdown the software.
- Shutdown Power Module and GPS Receiver.
- Disconnect power.
- Use auxiliary heater power to keep sensor on heat if needed.

Power Module (Electronic Box)

To remove the Power Module

- Remove the four screws securing the Power Module to the rack.
- Disconnect all the cables connected to the Power Module.
- Remove the Power Module.

To install the Power Module

Execute the above steps in reverse order.

GPS Receiver

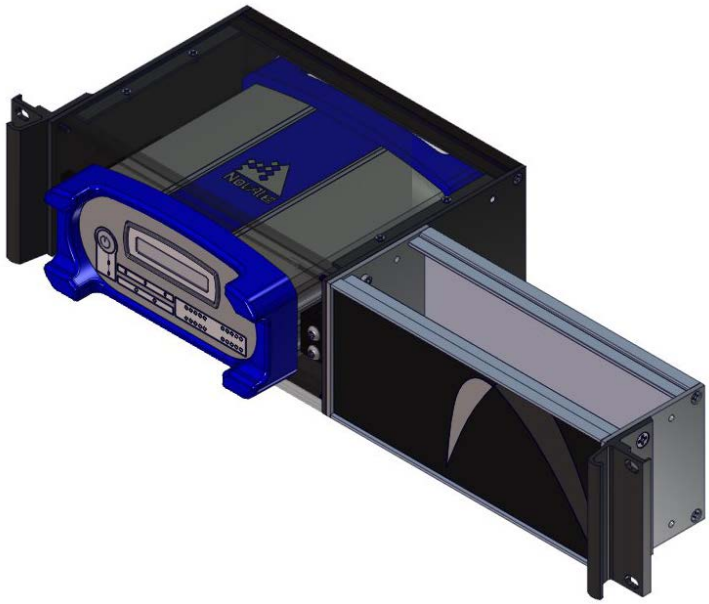

To remove the GPS Receiver

- Remove the four screws securing the GPS Receiver to the rack.
- Disconnect all cables connected to the GPS Receiver.
- Remove the GPS Receiver.

To install the GPS Receiver

- Execute the above steps in reverse order.

Laptop

To remove the laptop

- Extend the laptop drawer from the rack.
- Remove the cables from the laptop.
- Lift the two latches (Figure 1)at the back of the laptop.
- Remove the laptop from the cradle.

To install the laptop

- Extend the laptop drawer from the rack.
- Put laptop into the cradle.
- Press down and forward on the latches to secure the laptop.
- Connect cables to the laptop.

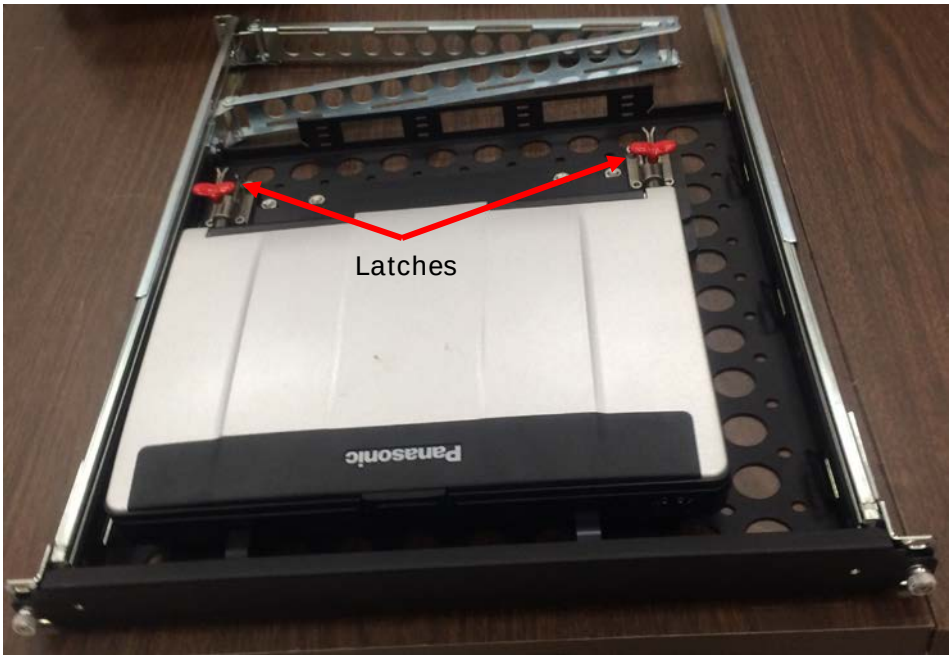

Figure B-1 Laptop Drawer

Air Damper

To remove the Air Dampers:

- Hold the Air Damper and while removing the bottom Bearing Screw and Bearing Screw Spacer using a 3mm hex wrench

To install the replacement Air Damper

- Execute the above steps in reverse order.
- Make sure that the Bearing Screw goes through the Rod End.
- Then put the Bearing Screw Spacer on the screw into the upper or lower Air Damper mounts.

Suspension Cord

To remover the Suspension Cord:

- Use the Gimbal Lock pins to secure the Gimbal to the Frame.
- Remove the Frame Lid. Refer to the Standby Storage section in Section 07 .
- Release the top of the Suspension Cord by pulling up on it and moving it to the keyway on the Frame.
- Use a 2.5mm hex wrench to remove the Collar from the Suspension Cord.
- Use a 2.5mm hex wrench to remove the two vertical screws and washers from the lower Suspension Cord Mount.
- Pull the Suspension Cord down through the Ring Mount on the Gimbal.
- Use a 2.5mm hex wrench to remove the screw from the Suspension Cord Clamp.

To install the Suspension Cord

- Execute the above steps in reverse order.
- Set the upper Suspension Cord Clamp by stretching ½ inch (12mm) of the Cord up through the Upper Suspension Cord Mount.
- Mark the Suspension Cord at the top of the keyway.
- Release the Suspension Cord and Install the Suspension Cord Clamp so that the mark is at the bottom of the keyway.
- Pull the Suspension Cord through the keyway and place the clamp into the Clamp Cutout.

Air-Filled Vibration Mount

To remove the Air-Filler Vibration Mount

- Release the air from the Air-Filled Vibration Mount.
- Use a $^{5}/_{16}$ inch hex wrench to remove the ⅜ inch bolt and lock washer from the top of the Air-Filled Vibration Mount Plate.
- Use a 5mm hex wrench to remove the three M6 screws holding the base of the Air-Filled Vibration Mount.
- Remove the Air-Filled Vibration Mount.

To install the Air-Filled Vibration Mount

- Execute the above steps in reverse order

Main Umbilical Cables

Refer to Appendix D for information about the ODU MINI-SNAP® Circular Connector with push-pull locking.

This plus additional information can be downloaded from the ODU website.

http://www.odu.de/fileadmin/redaktion/downloads/downloadcenter/assembly-instructions/odu-mini-snap-pc_english.pdf

APPENDIX C NORTHRUP GRUMMAN POWERGRID 800 UPS

The Northrup Grumman PowerGrid 800 UPS is an 800watt full double conversion rack mount uninterruptible power supply used with the TAGS-6 Turnkey Airborne Gravity System 6 gravity meter. Refer to Table C-1, Table C-2, Table C-3 and Table C-4 for specifications.

Table C-1 AC Output Specifications

AC Output		
Specification	**Value**	**Units**
Rated Voltage	120 True Sine Wave (±5%)	Volts AC
Frequency	60 (±0.25%)	Hertz
Rated Max. Current	6.7 (9.3 Peak Max.)	Amps
Current Range	0 - 6.7	Amps
Max. Rated Power	800	Watts
Total Harmonic Distortion	<1% (w/Resistive Load)	%
Run Time on Battery	9 (at 25°C, 80% Load)	Minutes
By-Pass Mode (Non Stacking)	ACout = ACin @≤135in ONLY (w/By-Pass Cable)	Volts AC

Table C-2 AC Input Specifications

AC Input		
Specification	**Value**	**Units**
Voltage Range (Universal)	90-264 (90-100 Internal Battery Supplemented Time Limited)	Volts AC
Frequency Range	47-63 @90-264 VAX / 393-407 @135VAC Max.	Hertz
Nominal Voltage (Universal)	115 - 230	Volts AC
Nominal Current	12@100VAC / 6@230VAC	Amps AC
Inrush Current (typical)	25@115 / 40@230V	Amps AC
Efficiency (typical)	≥78@120VAC/76@240VAC	%
Power Factor (typical)	≥0.98 @115VAC / >0.95 @230VAC (Full Load)	
Leakage Current	<1.0 @120VAC / <2.0@240VAC	mAmps AC
Conversion	Double	
MIL-STD-1399-300B	Yes	

Table C-3 DC Input Specifications

DC Input		
Specification	**Value**	**Units**
Voltage Range	21-32V (Input UV Turn-ON ≥23VDC)	Volts DC
Nominal Voltage	28V	Volts DC
Nominal Current	34A	Amps DC
Inrush Current (typical)	70 @ 28V	Amps DC
Efficiency (typical)	≥84 @ 30VDC / ≥82 @ 21VDC	%
Conversion	Single	
MIL-STD-704A, F	Yes	
MIL-STD-1275D	Yes (Except Sec. 3.1.6)	

Table C-4 Connectors Specifications

Connectors	
Specification	**Value**
AC Output (P1)	MS3102A16-10S Pin A = Line, Pin B = Ground, Pin C = Neutral
AC Input (P2)	MS3102A16-10P Pin A = Line, Pin B = Ground, Pin C = Neutral
DC Input (P4)	MS3102A20-23P Pin A = +Vin, Pin B = Common
Ethernet (P3)	RJ-45 (SNMP Communication)
Load Balance Interface (P5 / P6)	Stacking up to 4 Units (Requires 5-Pin LBI Cable Supplied)
Safety Ground	¼ - 20 Stud (Read Panel)

Front View

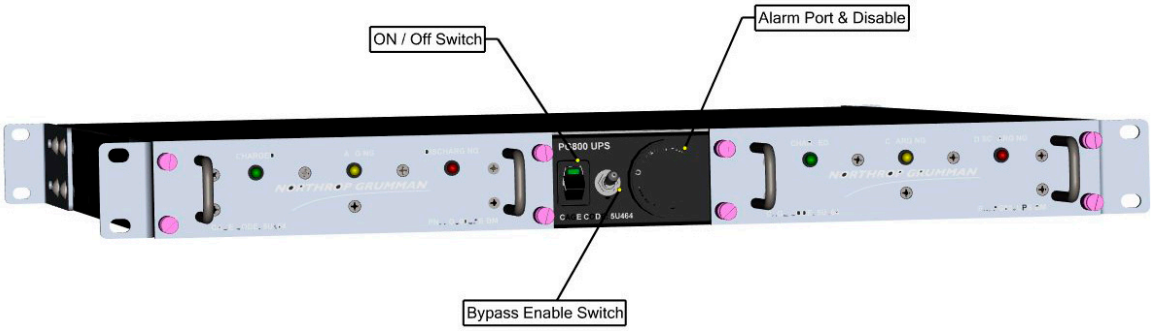

Figure C-1 Northrup Grumman PG800-UPS Front View

There is a set of indicator lights for each battery:

- Green light indicates battery is charged.
- Yellow light indicates battery is charging.
- Red light indicates battery is discharging - Investigate further. (Power may be disconnected).

NOTE	To turn off the alarm, gently insert a flat-ended nonmetal tool into the **Alarm Port & Disable** and touch the metal inside the Alarm housing.

Back View

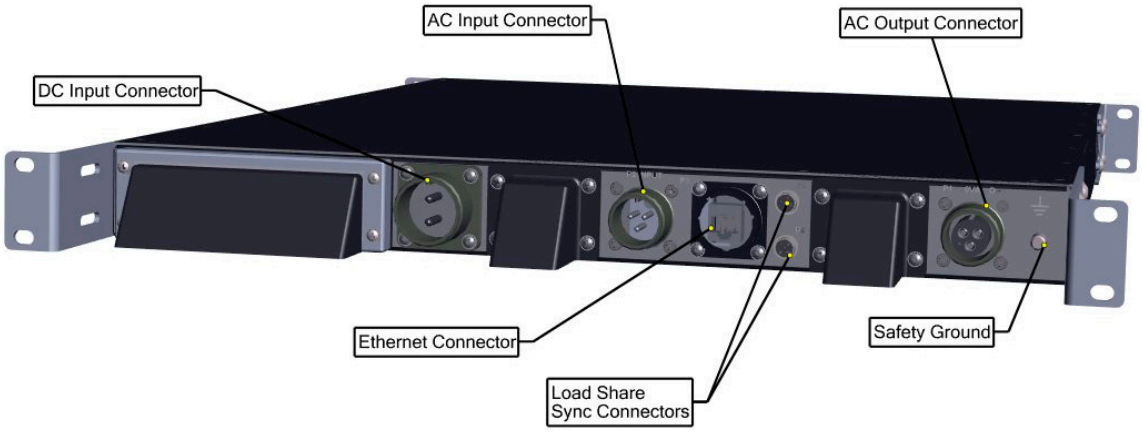

Figure C-2 Northrup Grumman PG800-UPS Back View

APPENDIX D ODU MINI-SNAP® SERIES B

THE FP LOCKING PRINCIPLE SERIES B

Connector
in **unmated** condition

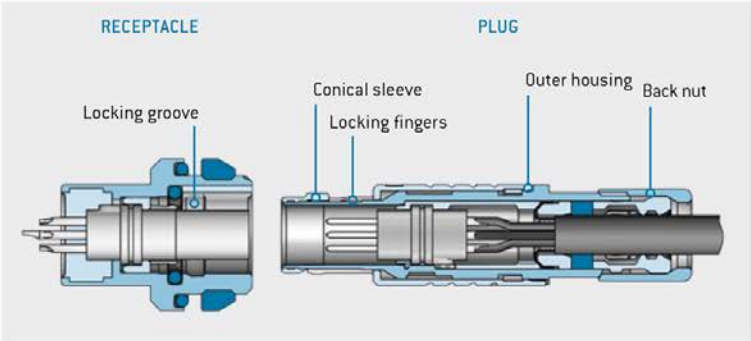

Connector
in **mated** condition

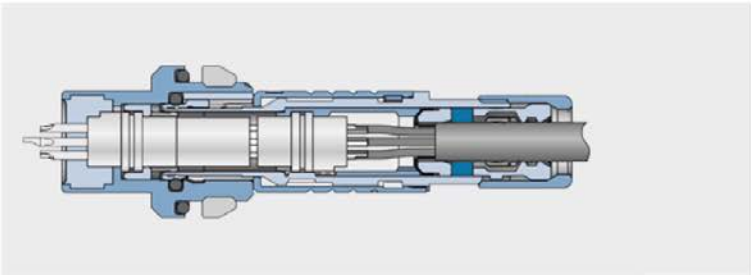

Pulling on the cable or back nut will lock the "fingers" firmly in place in the receptacle's locking groove. This **prevents** the connector **from being disconnected.**

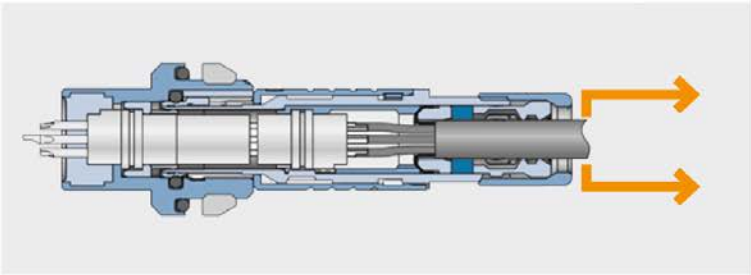

But pulling on the **outer housing** will cause the "fingers" to emerge from the locking groove, **making it easy to disconnect** the connector.

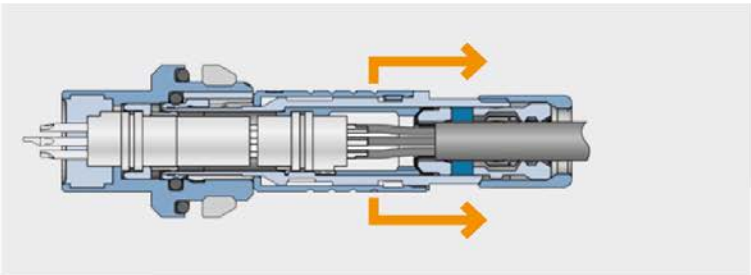

THE FP LOCKING SERIES B IN SECTIONAL VIEW

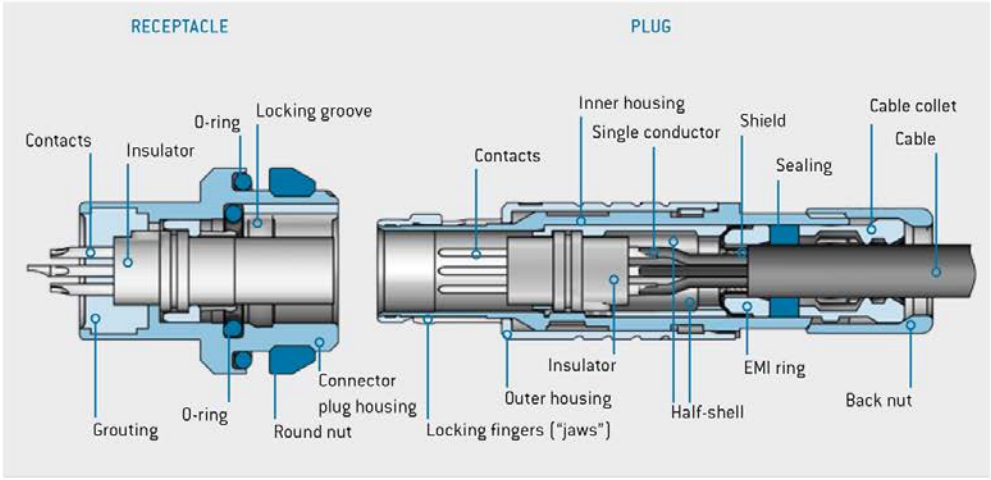

AVAILABLE SIZES

OUTER DIAMETER IN MM (PLUG)

Scale 1:1

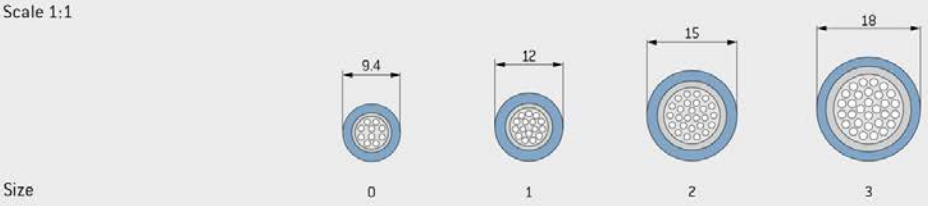

APPENDIX E BLOCK WIRING DIAGRAM

TAGS-6
Block Wiring Diagram

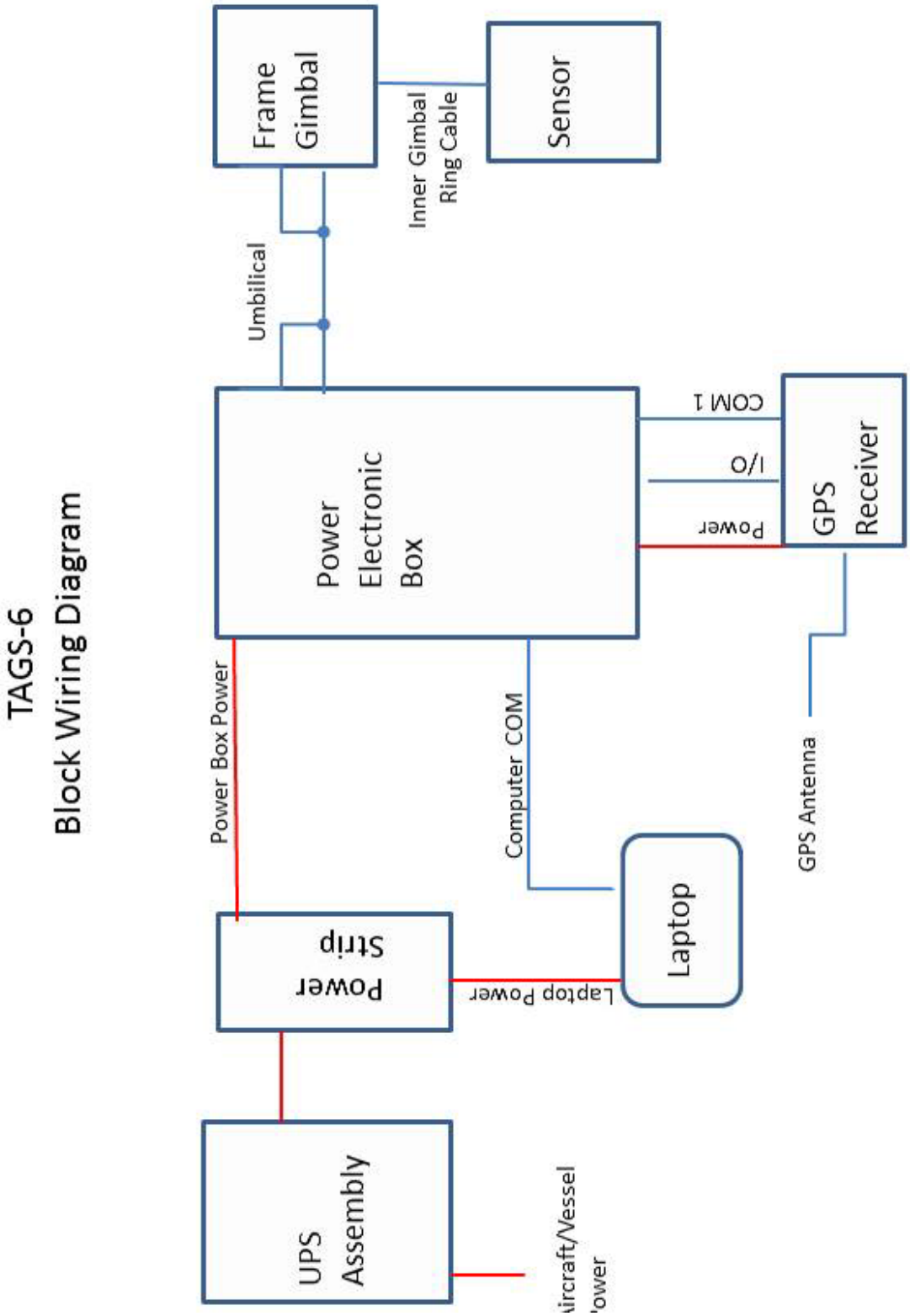

APPENDIX F TROUBLESHOOTING

Power Troubleshooting

Tip Num	Unit	Problem/Error Message	Solution
1	UPS	No power to the UPS. (No lights on the front panel.)	• Check the AC power connection from the AC outlet to the back of the UPS. • Check the ON/OFF switch on the front of the UPS is ON. • Check the AC output voltage from the supply outlet.
2	UPS	No power from the UPS to the Power Module. (Red Meter Heat light located on the Power Module is OFF.)	• Plug in the power cable from the rear outlet of the UPS to the rear panel of the Timing Unit. • Check that the UPS is turned ON. • Check that the AC circuit breakers on the front of the power module are pushed in. • Verify correct input voltage.
3	Sensor	No power to the Sensor. (Heater lights located on the Sensor Lid are not Lit or Flashing.)	• Check power input to power module (See Power Troubleshooting Tip #2 above.) • Check the Gimbal Sensor cable connection between the Gimbal and Sensor. • Check the umbilical cable is connected from the Power Module to the frame.
4	Platform	No power to the Platform. (Platform moves freely when pushed)	• Check that the main switch on the Power Module is turned ON. • Check the umbilical cable is connected from the Power Module to the frame. • Check that the Torque Motors circuit breaker on the front of the Power Module is pushed in.
5	Computer	No power to the computer	• Check the power input from the Timing Module. • Check the computer status: Hibernation, dead battery, plugged in.

Sensor Troubleshooting

Tip Num	Problem/Error Message	Solution
1	The sensor does not clamp or unclamp.	• From Piperpro, under the **System** menu, run **Set Limits**. Refer to the "Start-up Sequence" section in Section 06 for detailed instructions. • Hold the manual Clamp button on the Sensor Lid for 30 seconds.
2	Status bar reads No GPS.	• A manual GPS synchronization may be required. Refer to the "Start-up Sequence" section in Section 06 for detailed instructions..

Other Hardware Troubleshooting

Tip Num	Problem/Error Message	Solution
1	Sensor Internal Pressure and Gravity Reading drift	MGS-6 sensors are leak-tested at the factory but they are not able to be perfectly sealed. There will be approximately 0.2 mGals decrease in apparent gravity for every 1 millibar increase in internal pressure. This is due to the floatation effect on the gravity test mass, since density changes with pressure. Assuming the maximum leak rate specification of 1.01 millibars per day, expected leakage could be up to 33.86 millibars per month. This would appear as meter drift of 7 mGals/month.
2	Sensor Internal Pressure and Meter Temperature	As the meter cools, a 101.6 millibars pressure differential is created which increases the leak rate. Outside air will continuously leak into the under-pressured sensor. When the meter is back at operating temperature, it will now be up to 101.6 millibars higher pressure than before. (Typical cause is transporting the meter without heating power available.)
3	Outer Gimbal Ring Locks	The gimbal should move freely and smoothly at all times for data collection. The gimbal clamps are used during factory testing and can also be used to lock the gimbal in place during very rough weather, shipping and standby. They should never be used during normal surveying. They cannot be damaged during shipping in the transit case. Check the torque motor bearings as they may have also been damaged. Contact Micro-g LaCoste for replacement if needed. **NOTE** If Gimbal Ring Locks are used make sure to pull out the Torque Motor circuit breaker on the front of the Power Module.